DWG NO. CS-SP40QL-00

REV.	DESCRIPTION	DATE	DWG	CH'D	CH'D	APP'D
0	First Issued	'16.11.15	J.Y.CHO	CH.R,KIM	–	C.G.LEE

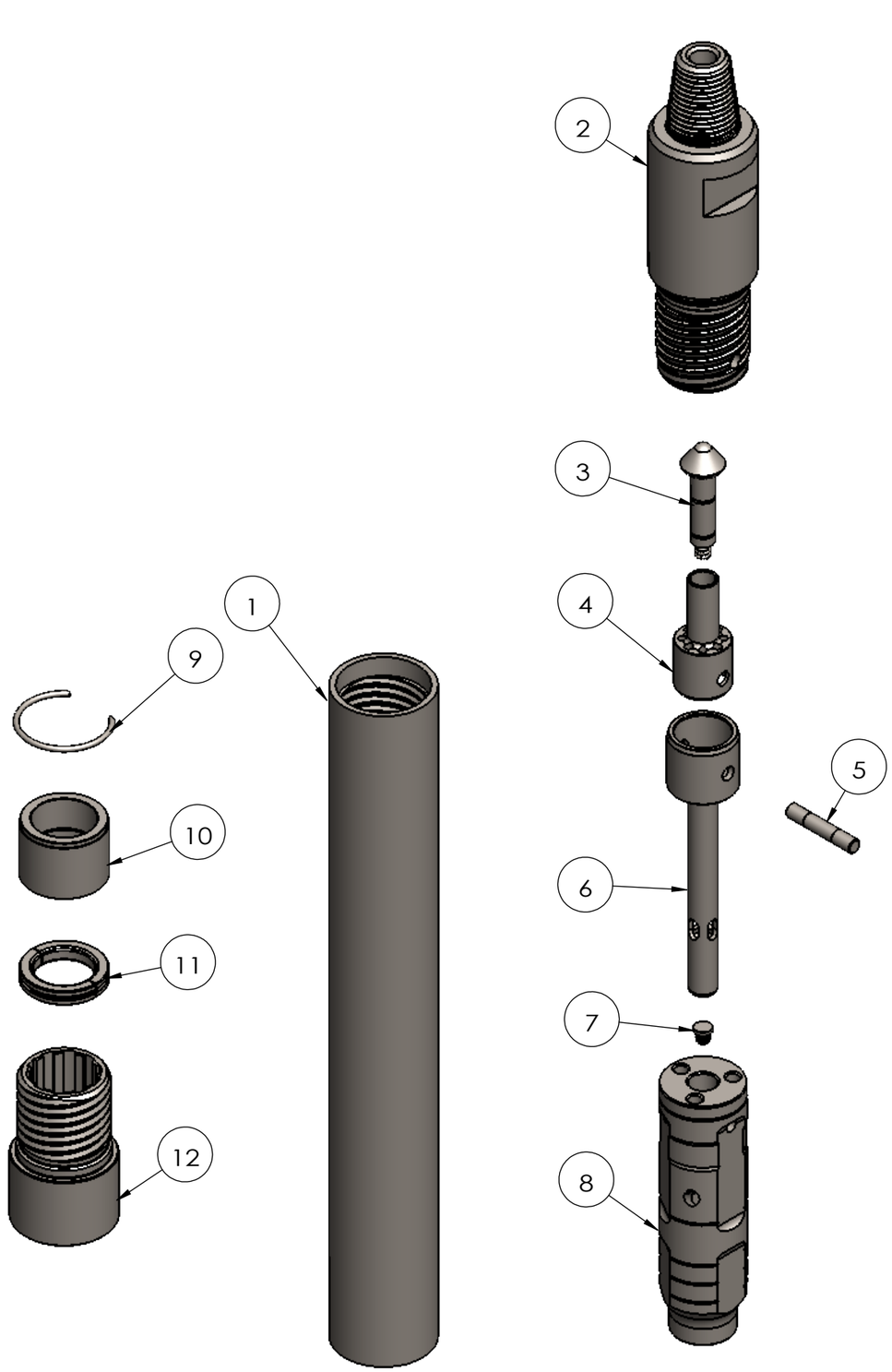

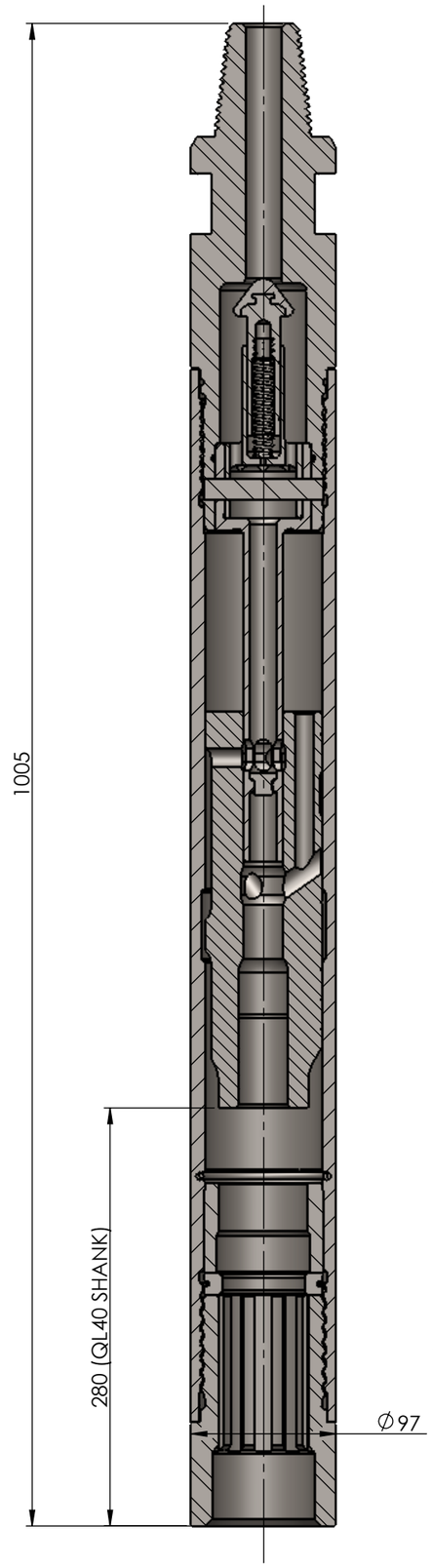

품번	품명	비고	수량
1	WEAR SLEEVE	CS-SP40MS-01	1
2	BACKHEAD	CS-SP40IR-02	1
3	CHECK VALVE with SPRING BUSH	Standard	1
4	CHECK VALVE BOX	CS-SP40IR-03	1
5	AIR TUBE PIN	CS-SP40IR-05	1
6	AIR TUBE	CS-SP40IR-04	1
7	PLUG BLIND	CS-SP40IR-06	1
8	PISTON	CS-SP40QL-07	1
9	PISTON STOP RING	Standard	1
10	GUIDE BUSH	CS-SP40QL-08	1
11	BIT RETAINING RING & O-RING	CS-SP40IR-09	1
12	CHUCK	CS-SP40QL-10	1

CHANG-SHIN INT'L CO.,LTD
ULSAN KOREA

APP'D			TITLE		
CH'D			Speedrill 40QL Hammer Assy		
CH'D			MATERIAL		MODEL
DRAW			STANDARD		SP40QL
	DATE	SIGN.	Proj' 3각법	DWG NO.	CS-SP40QL-00
			Weight 38 kg		